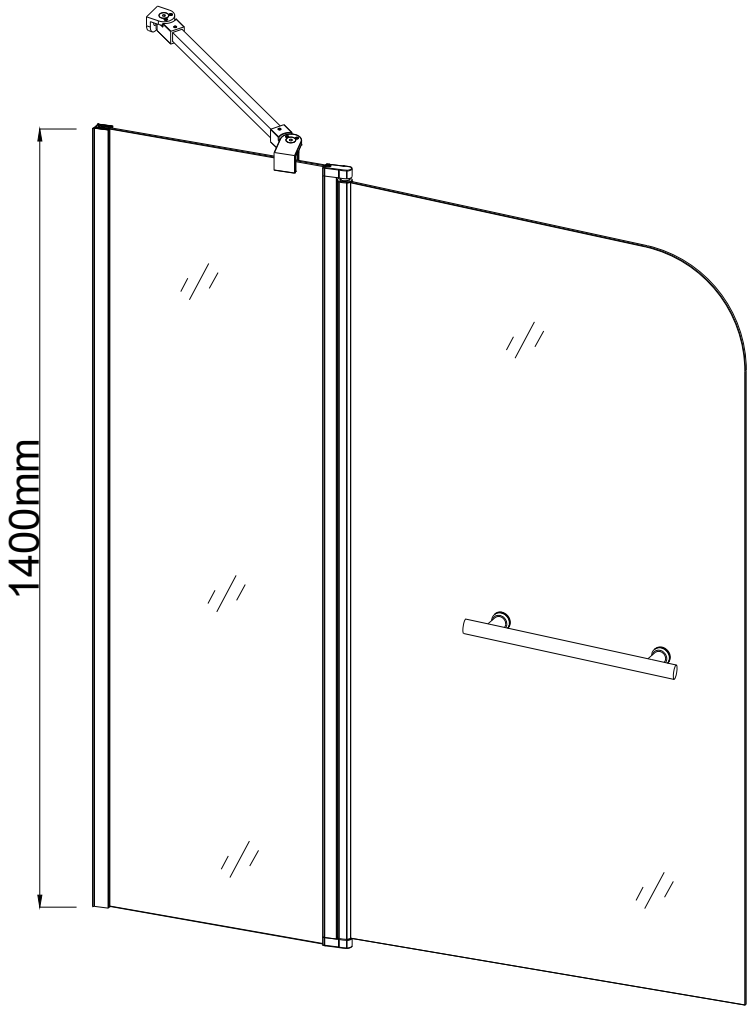
1400mm

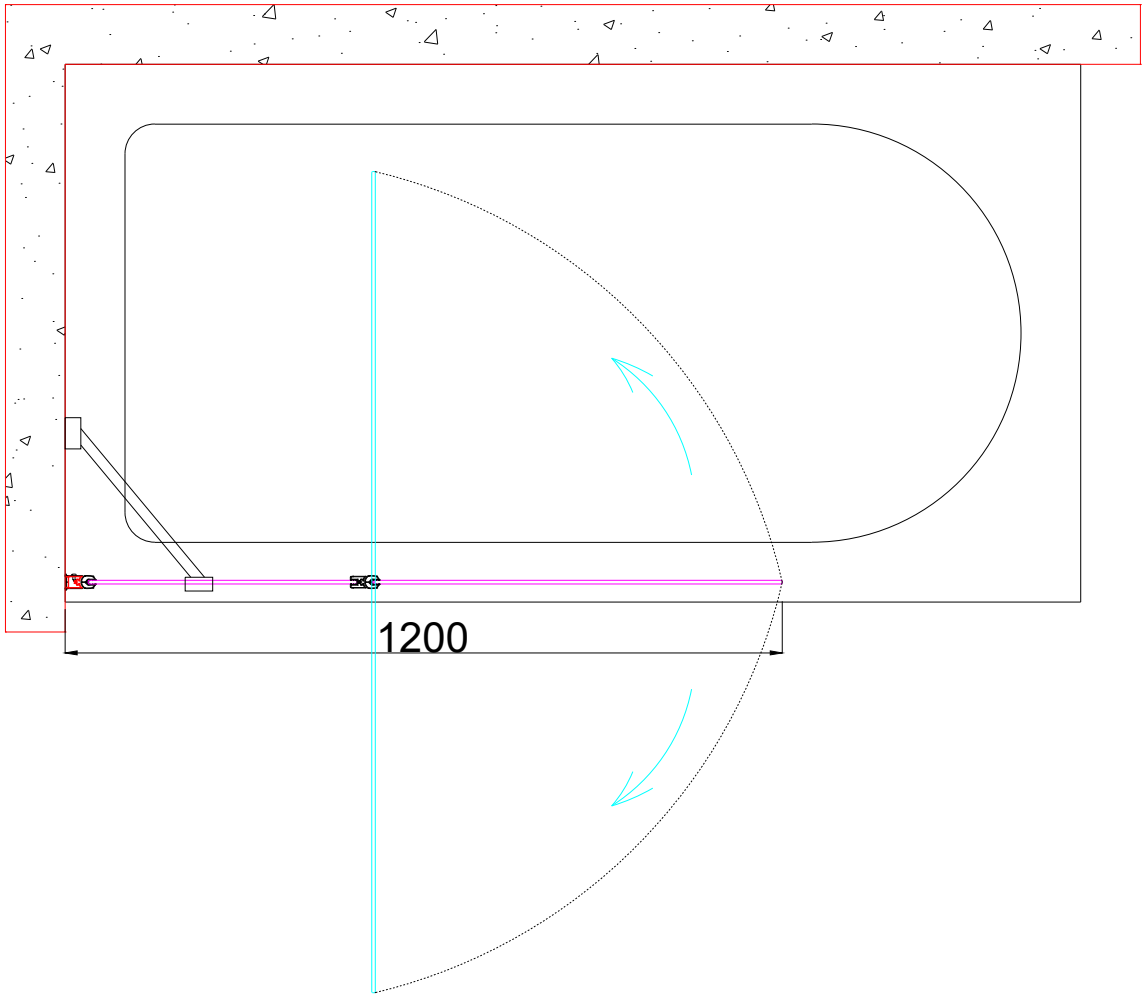
1200